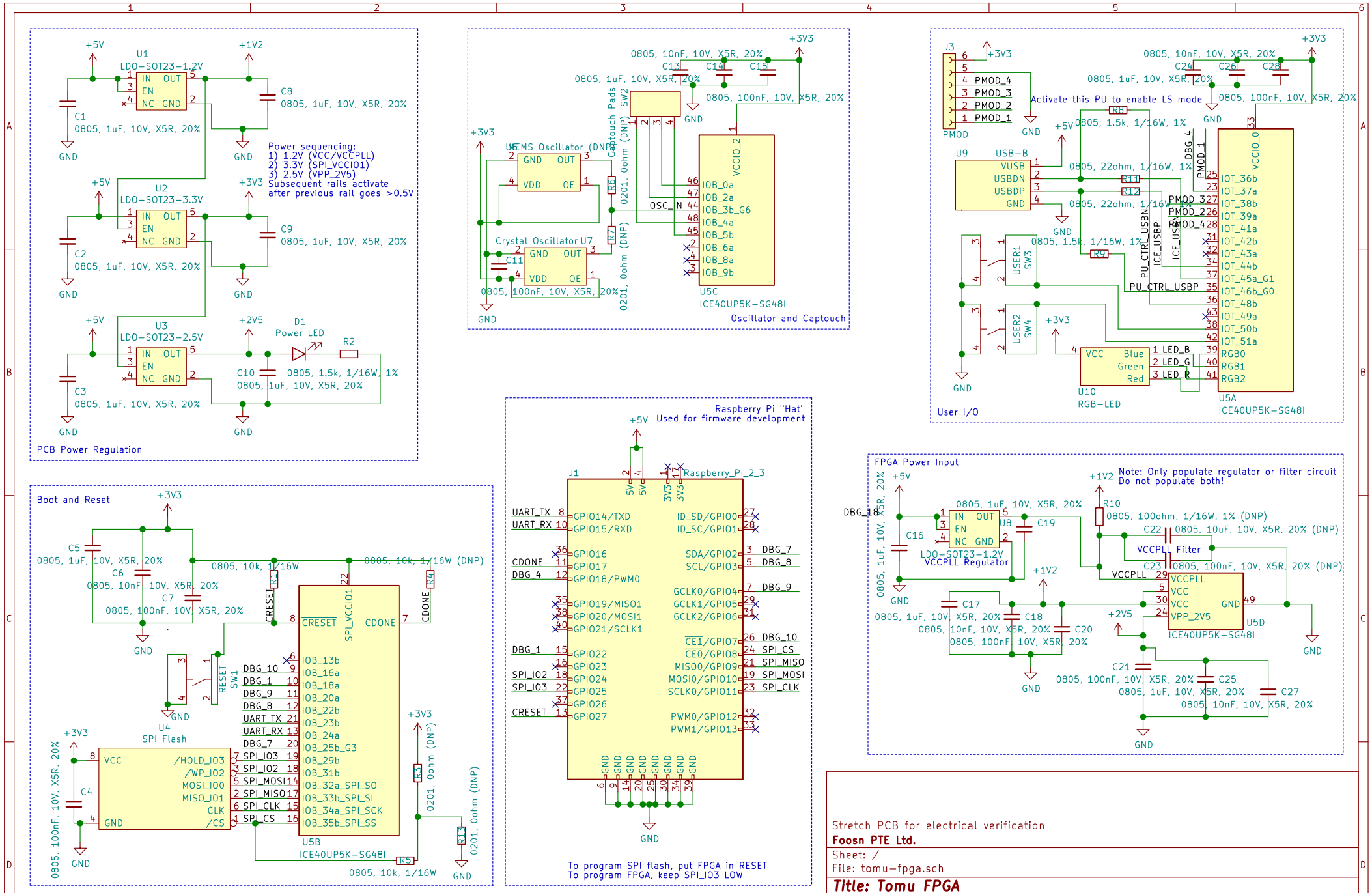

Stretch PCB for electrical verification

Foosn PTE Ltd.

Sheet: /

File: tomu-fpga.sch

Title: Tomu FPGA

Size: A4	Date: 2018-10-30	**Rev: EVT1**
KiCad E.D.A. kicad (5.0.0)		Id: 1/1