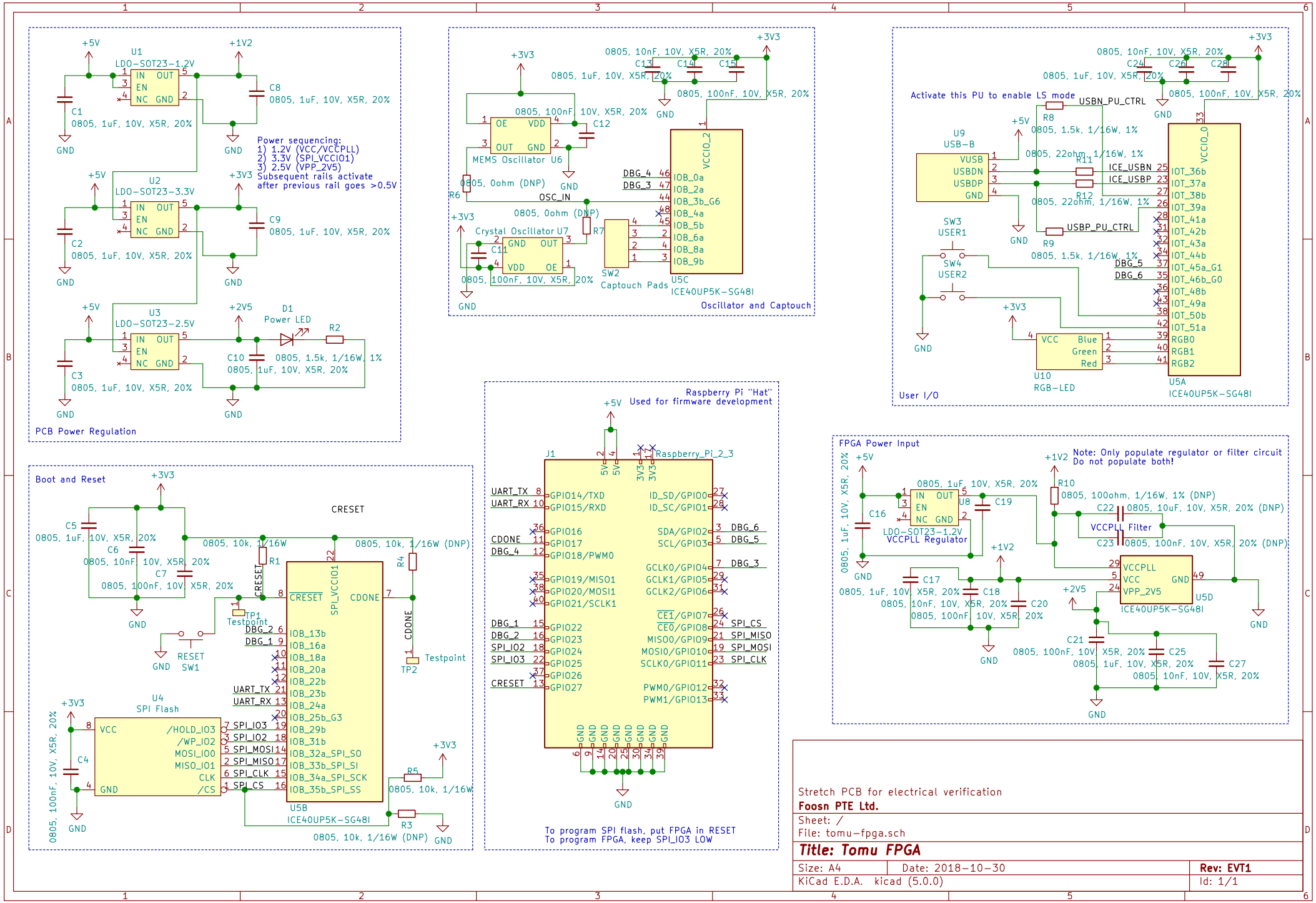
PCB Power Regulation
U1 LDO-SOT23-1.2V
U2 LDO-SOT23-3.3V
U3 LDO-SOT23-2.5V
C1 0805, 1uF, 10V, X5R, 20%
C2 0805, 1uF, 10V, X5R, 20%
C3 0805, 1uF, 10V, X5R, 20%
C8 0805, 1uF, 10V, X5R, 20%
C9 0805, 1uF, 10V, X5R, 20%
C10 0805, 1uF, 10V, X5R, 20%
D1 Power LED
R2 0805, 1.5k, 1/16W, 1%
Power sequencing:
1) 1.2V (VCC/VCCPLL)
2) 3.3V (SPI_VCCIO1)
3) 2.5V (VPP_2V5)
Subsequent rails activate after previous rail goes >0.5V
Oscillator and Captouch
MEMS Oscillator U6
Crystal Oscillator U7
SW2 Captouch Pads
U5C ICE40UP5K-SG48I
User I/O
Activate this PU to enable LS mode
U9 USB-B
SW3 USER1
SW4 USER2
U10 RGB-LED
U5A ICE40UP5K-SG48I
Boot and Reset
U4 SPI Flash
U5B ICE40UP5K-SG48I
Raspberry Pi "Hat" Used for firmware development
J1 Raspberry_Pi_2_3
To program SPI flash, put FPGA in RESET
To program FPGA, keep SPI_IO3 LOW
FPGA Power Input
Note: Only populate regulator or filter circuit Do not populate both!
U8 LDO-SOT23-1.2V VCCPLL Regulator
VCCPLL Filter
U5D ICE40UP5K-SG48I
Stretch PCB for electrical verification
Foosn PTE Ltd.
Sheet: /
File: tomu-fpga.sch
Title: Tomu FPGA
Size: A4
Date: 2018-10-30
Rev: EVT1
KiCad E.D.A. kicad (5.0.0)
Id: 1/1